Exporting Generators Under Rule 21

April 29, 2011

SCE's Active Interconnection Requests (excluding NEM)

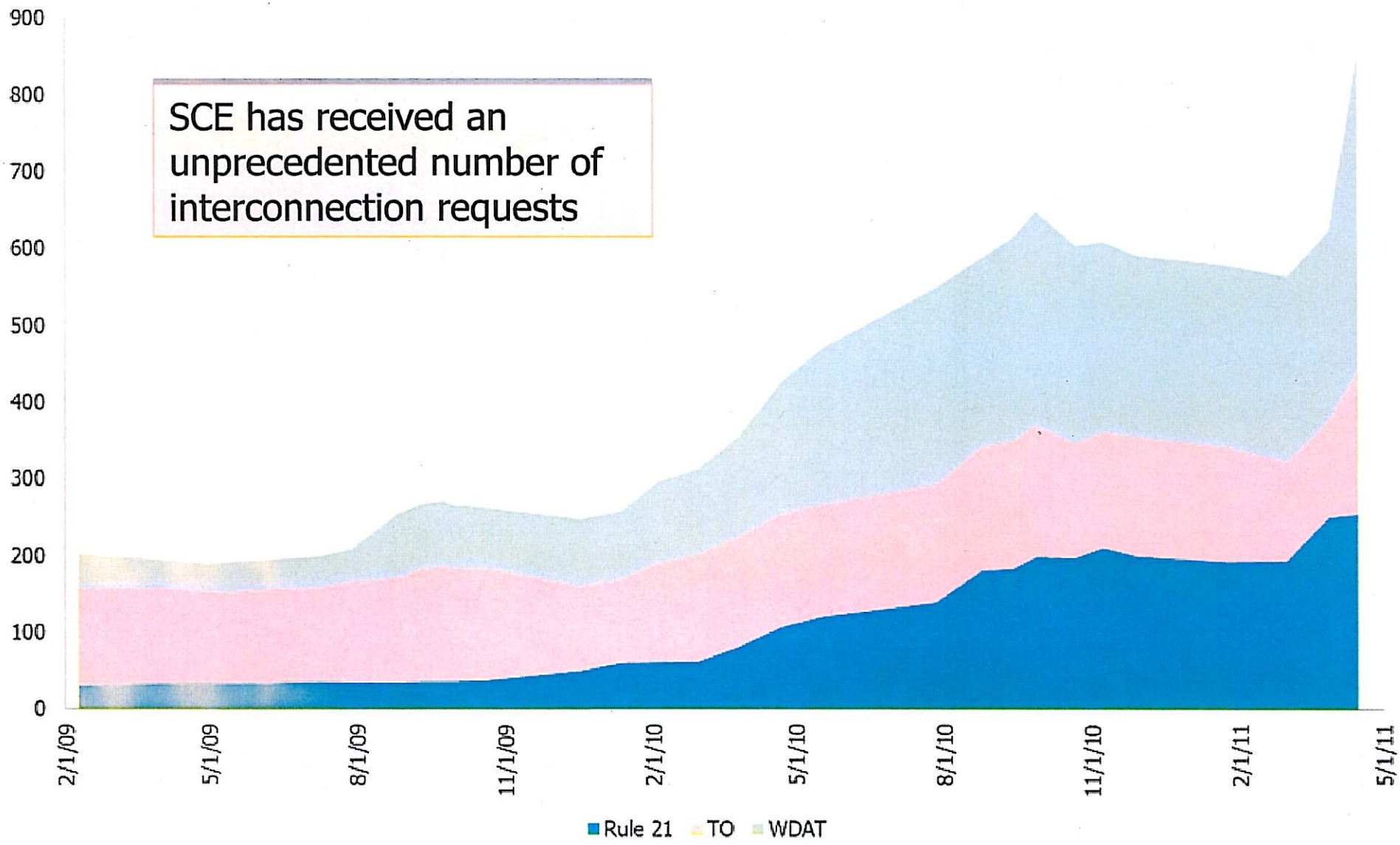

CREST Generator Locations

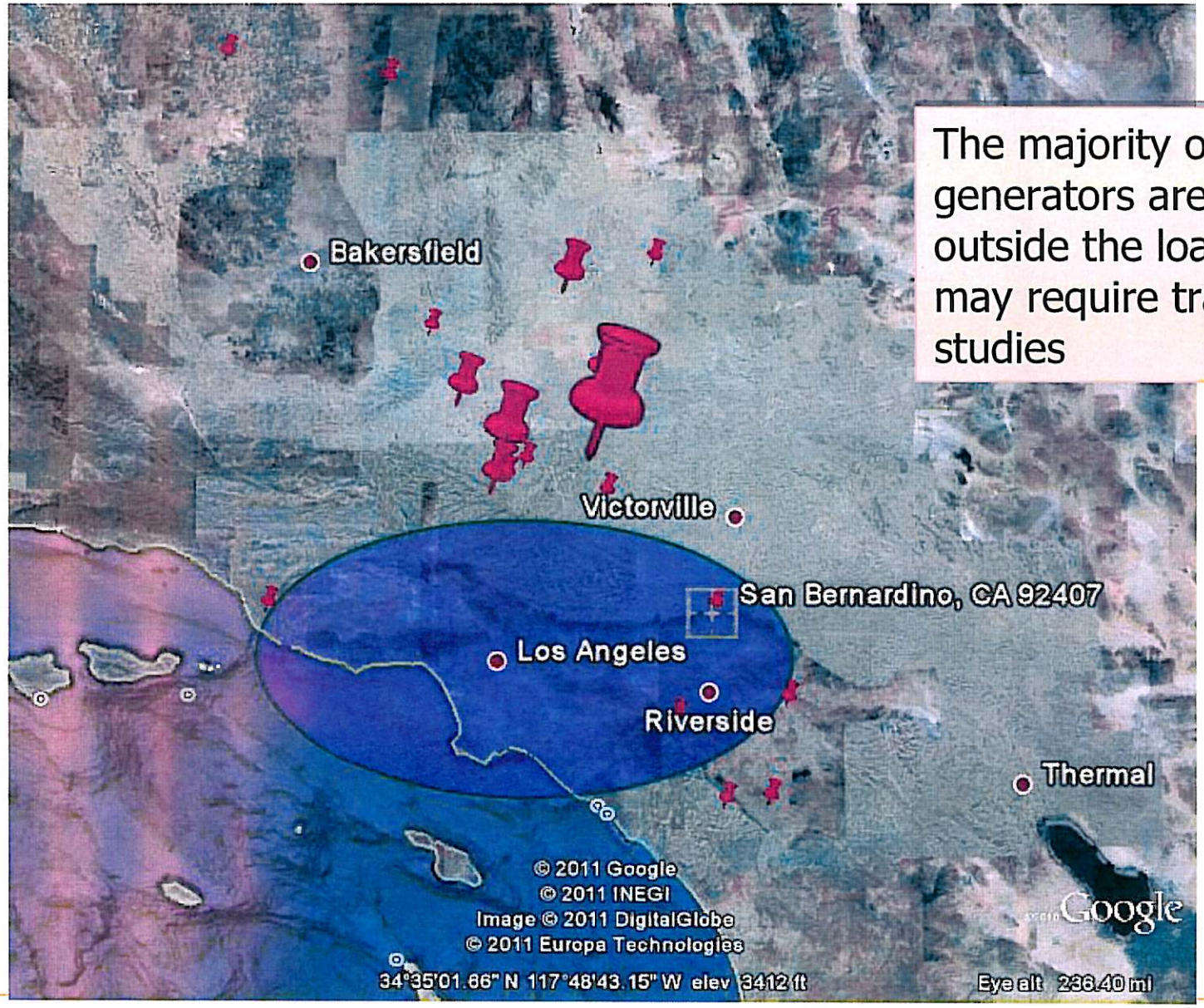

The majority of CREST generators are locating outside the load center and may require transmission studies

CREST Challenge – Cluster Interdependency

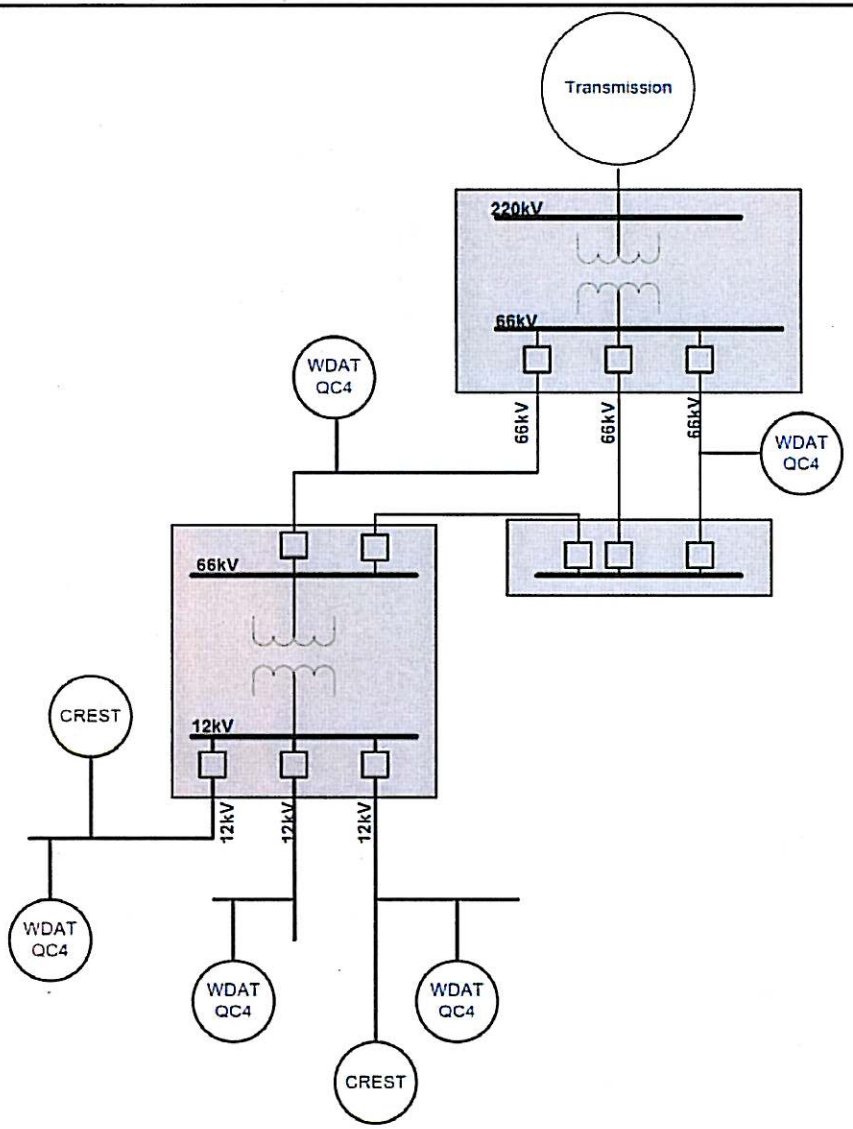

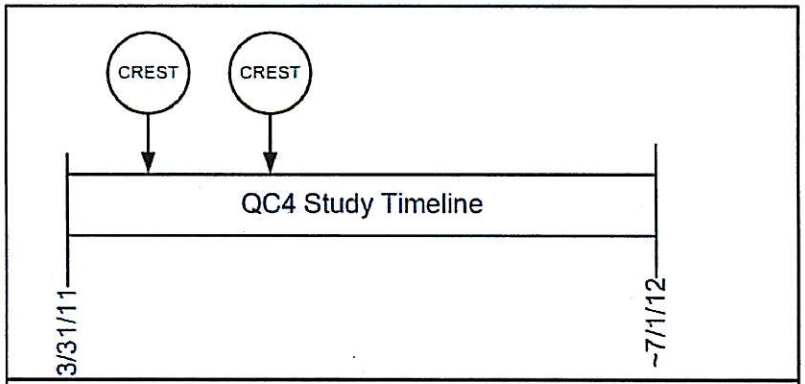

If base cases are established based on projects submitted by 3/31/2011, and final studies for the WDAT projects are not completed until July 2012, then how can the CREST projects be studied for:

- Short Circuit Duty/Breaker Replacement
- Power Flow
- Thermal overload
- Voltage Control
- Cost Responsibility

CREST Challenges Continued

- SCE has added staff in 2010 and 2011 to handle the growth in interconnection requests
  - Grid Interconnection and Contract group has added 9 employees
  - Field Engineering has created a new group with 8 employees to study distribution interconnections
- SCE was required to develop policies and procedures because the Rule 21 tariff lacks guidelines on study methodology, queue management, standardized agreements and coordination with other interconnection tariffs
- Because of the interdependency issue, some projects are delayed waiting for cluster study completion

Objectives for Rule 21 Reform for Exporting Generators

- Ensure generators are interconnected as quickly as possible in a safe and reliable manner
- Develop a study process that is coordinated with the CAISO and WDAT interconnection tariffs and recognizes the interdependency of interconnecting generators
- Allow for Deliverability Studies for Resource Adequacy
- Provide for equitable cost allocation
- Preserve Rule 21 original functionality for "behind the meter" applications

Glossary and Resources

Rule 21 Working Group

California Public Utilities Commission

April 29, 2011

Contents

1. Basic Glossary
2. Tables: Customer and Wholesale Programs and Interconnection
3. CPUC Interconnection Decisions
4. Rule 21 Technical Screens and Methodology
5. Key websites

Basic Glossary (where noted, definitions are from Rule 21)

Distribution system – All electrical wires, equipment, and other facilities owned or provided by the utility, other than interconnection facilities, by which the utility provides distribution service to its customers (R21 Sec. H)

Net Energy Metering (NEM) – Metering for the receipt and delivery between the customer-generator and the utility pursuant to Public Utilities Code Section 2827 and utility Schedule NEM.

Point of Common Coupling (PCC) – The transfer point for electricity between the electrical conductors of the utility and the electrical conductors of the producer. (R21 Sec. H)

Point of Interconnection – The electrical transfer point between a generating facility and the distribution system. This may or may not be coincident with the point of common coupling. (R21 Sec. H)

Power Purchase Agreement – An agreement for the sale of electricity by the producer to the utility. (R21)

PURPA Qualifying Facilities – Public Utility Regulatory Policies Act (1978) requires investor-owned utilities (IOUs) to interconnect with and purchase power from Qualifying Facilities (QFs) at rates that do not exceed the IOU's avoided cost. Qualifying Facilities (QFs) are a distinct class of energy producer which consists of either small-scale producers of commercial energy who normally self-generate energy for their own needs but may have occasional or frequent surplus energy, or producers who happen to generate electric energy as a byproduct of other activities, for example a cogeneration or combined heat and power facility.

•Rule 21 – Tariff that sets metering and operating standards for self-generation facilities interconnected to the utility distribution system

Retail Programs and Interconnection

Retail / Customer Load-Serving Program	Applicable Interconnection Tariff	Key websites
California Solar Initiative	Rule 21	http://www.cpuc.ca.gov/puc/energy/solar/aboutsolar.htm http://www.gosolarcalifornia.ca.gov/about/index.php
Self-Generation Incentive Program	Rule 21	http://www.cpuc.ca.gov/PUC/energy/DistGen/sgip/
New Homes Solar Partnership	Rule 21	http://www.gosolarcalifornia.org/about/nshp.php
Emerging Renewables Program	Rule 21	http://www.consumerenergycenter.org/erprebate/

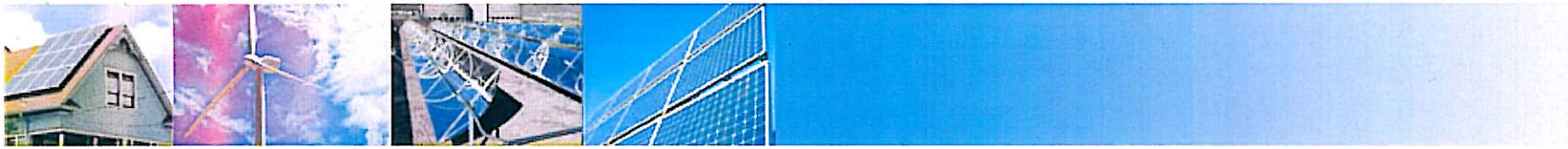

Wholesale Programs and Interconnection

Wholesale / System Load-Serving Program	Applicable Interconnection Tariff	Key websites
Renewable Feed-In Tariffs	Mixed	http://www.cpuc.ca.gov/PUC/energy/Renewables/hot/feedintariffs.htm
PG&E	WDAT	http://www.pge.com/b2b/energysupply/wholesaleelectricsuppliersolicitation/standardcontractsforpurchase/
SCE ("CREST Program")	Rule 21	http://www.sce.com/EnergyProcurement/renewables/crest.htm
SDG&E	Rule 21	http://www.sdge.com/regulatory/AB1969.shtml
AB 1613-Combined Heat & Power	Rule 21	http://www.cpuc.ca.gov/PUC/energy/Procurement/QF/
Utility-Owned Solar PV Programs (all IOUs)	WDAT	http://www.cpuc.ca.gov/PUC/energy/Renewables/hot/Utility+PV+Programs.htm
Renewable Auction Mechanism	As appropriate	http://www.cpuc.ca.gov/PUC/energy/Renewables/hot/Renewable+Auction+Mechanism.htm
Renewable Portfolio Standard	WDAT	http://www.cpuc.ca.gov/PUC/energy/Renewables/index.htm

CPUC Interconnection Decisions

Decision	Title	Summary
Decision 00-11-001 November 2, 2000 http://docs.cpuc.ca.gov/published/Final_decision/3252.htm	**INTERIM DECISION ADOPTING INTERCONNECTION STANDARDS**	"This decision adopts the Rule 21 language recommended by the California Energy Commission (Energy Commission) on June 27, 2000 in its entirety, with one modification. Section 2.7 is modified as described herein. A Model Tariff is attached as Appendix A. Pacific Gas and Electric Company (PG&E), San Diego Gas & Electric Company (SDG&E), and Southern California Edison Company (SCE) are directed to file compliance advice letters to replace their existing Rule 21 with the Model Tariff, within 15 days of the effective date of this order."
Decision 00-12-037 December 21, 2000 http://docs.cpuc.ca.gov/published/Final_decision/4117.htm	**DECISION ADOPTING INTERCONNECTION STANDARDS**	"This decision approves the Rule 21 language adopted by the California Energy Commission (Energy Commission) on October 25, 2000 in its entirety, as conformed with Decision (D.) 00-11-001. A Model Tariff is set forth in Attachment A that incorporates changes made in D.00-11-001 into the Energy Commission recommendation. A model Interconnection Application Form and agreement are set forth in Attachments B and C. Pacific Gas and Electric Company (PG&E), San Diego Gas & Electric Company (SDG&E), and Southern California Edison Company (SCE) are directed to file compliance advice letters to replace their existing Rule 21 with the Model Tariff, Interconnection Application Form and Agreement, within 15 days of the effective date of this order."

CPUC Interconnection Decisions (cont.)

Decision, Date, Link	Title	Summary Paragraph
Decision 01-07-027 July 12, 2001 http://docs.cpuc.ca.gov/published/FINAL_DECISION/8823.htm	**INTERIM DECISION ADOPTING STANDY RATE DESIGN POLICIES**	"This decision is part of a broader consideration of rules and policies affecting the deployment of onsite generation facilities. Such facilities are "onsite" in the sense that they are located on or in close proximity to the property of the customer or customers whose load the facilities are designed to serve. Here, we adopt interim standby rate design policies for onsite generation facilities that are interconnected to and operate in parallel with the distribution system in accordance with Rule 21."
Decision 02-03-057 March 21, 2002 http://www.energy.ca.gov/distgen/interconnection/CPUC_SECTION-2827.PDF	**OPINION INTERPRETING PUBLIC UTILITIES CODE SECTION 2827**	"Generators eligible for net energy metering under Pub. Util. Code § 2827 are exempt from paying for costs associated with interconnection studies, distribution system modifications, or application review fees."
Decision 05-08-013 August 25, 2005 http://docs.cpuc.ca.gov/PUBLISHED/FINAL_DECISION/48945.htm	**INTERIM OPINION ADOPTING CHANGES IN INTERCONNECTION RULES FOR DISTRIBUTED GENERATION**	"This decision adopts changes to rules governing interconnections between distribution systems of electric utilities and distributed generation (DG) facilities, which are power generators owned and operated by customers and which may provide power to the utility. Our order instituting this rulemaking stated our intent to consider such issues as they relate to metering requirements, interconnection fees and costs, and resolution of disputes between DG developers and utilities, among other things. We raised these issues hoping to simplify tariff rules, promote a fair allocation of cost responsibility and promote the development of cost-effective DG projects generally. Many of the tariff changes we order today have recently been adopted formally in a report issued by the California Energy Commission (CEC)."

Rule 21 Technical Screens and Methodology

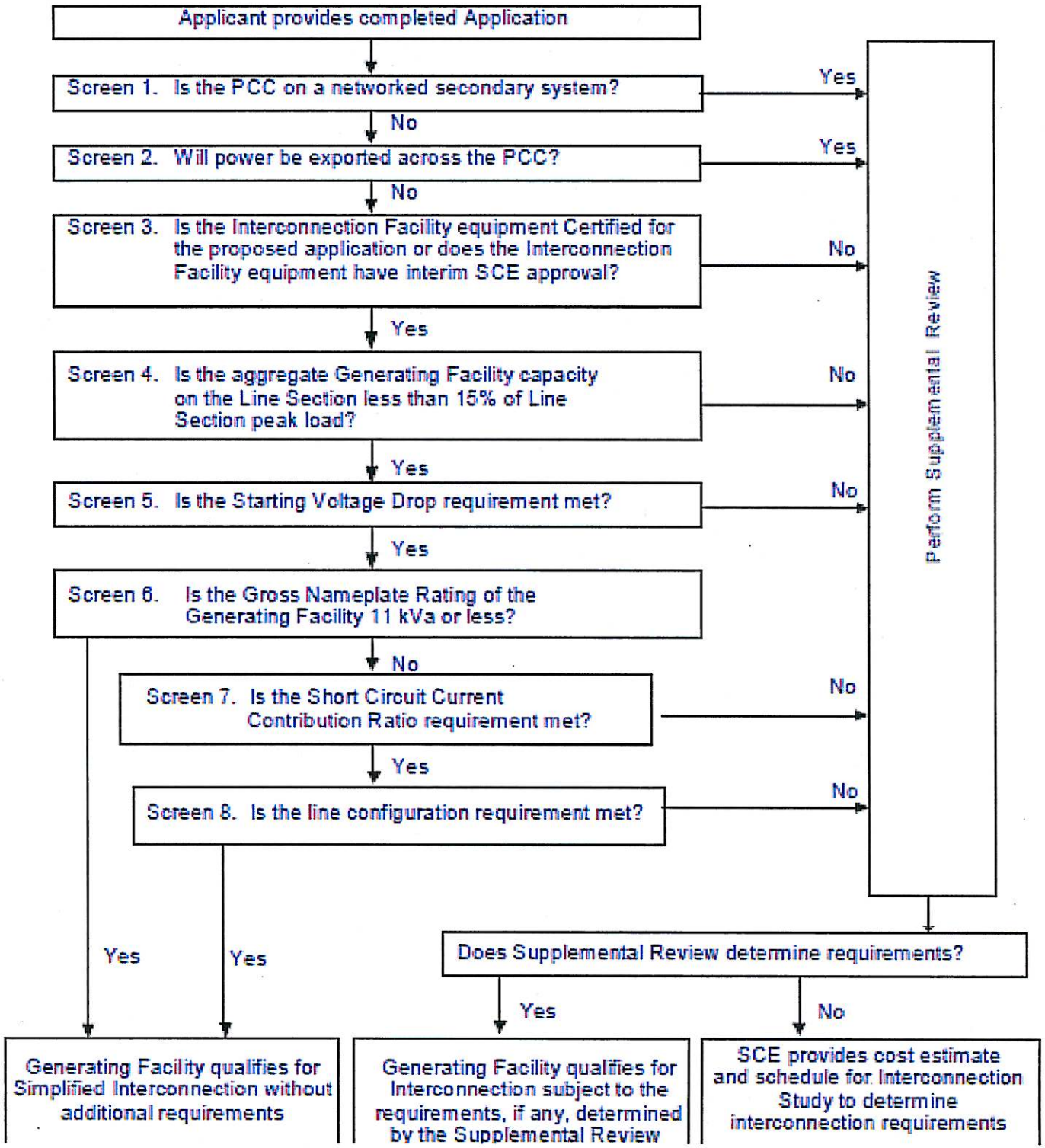

Key Websites

CPUC Rule 21 Working Group:
http://www.cpuc.ca.gov/PUC/energy/DistGen/rule21.htm

CEC Rule 21 Working Group History:
http://www.energy.ca.gov/distgen/interconnection/interconnection.html

CEC Distributed Energy Resource pages, including California Interconnection Guidebook and Draft Supplemental Review Guideline:
http://www.energy.ca.gov/distgen/index.html